佩达 PEIDA Super
CEILING&PARTITION

Address : Unit 617, 6/F.,Fuying International Building,No.166 Changgang Road Central,Guangzhou,China
Postal Code : 510250
Tel : 86-20-6236 1215
Fax : 86-20-6236 1237
Mobile : 86-1358 0480 068
Website : www.gzpanda.cn
E-mail : sales@gzpanda.cn pandadecoration@gmail.com

公司地址：中国广东省广州市海珠区昌岗中路166号之三富盈国际大厦六楼617室
邮政编码：510250
电话：86-20-6236 1215
传真：86-20-6236 1237
手机：86-1358 0480 068
网址：www.gzpanda.cn
邮箱：sales@gzpanda.cn pandadecoration@gmail.com

PANDA

佩达 PEIDA Super
CEILING&PARTITION

广州佩达商贸发展有限公司
GUANGZHOU PANDA COMMERCIAL DEVELOPMENT CO.,LTD.

About Us



Guangzhou Panda Commercial Development Co., Ltd. is a professional enterprise producing indoor and outdoor metal aluminum ceiling including metal aluminum curtain board, special ceiling, galvanized iron keel, aluminum pressed veins board, honeycomb board and integrated ceiling system etc.

Our company has been established in 2007, after many years, it has been developed a classic industrial image and excellent reputation in metal aluminum ceiling industry. The Guangzhou Panda Commercial Development Co., Ltd. Occupies an area of 5066m² with modern automation production workshops and office building.

Many gifted engineering designers are employed in order to provide the integration if designing, producing, installing services for our customers. The ISO9001;2008 Quality Management System leads us to control the quality of all products, researching and developing the environmental friendly decorating materials.

"To perfect the technology to provide fast, accurate and satisfactory service" is our goal.

Company culture:
1)Quality Concept: Honest, Perfect
2)Management Philosophy: Excellent Employees, Model Enterprises
3)Service concept: unremitting pursuit of perfection
4)Marketing Concept: Quality creates brand, manages open market.
5)Competition Concept: A market without competitors is a market without a future. Respecting your opponent is protecting yourself
6)Corporate mission: promote healthy living and build green homes.
7)Corporate purpose: Environmental protectio

Certificate:









www.pandamanufacturer.com

PEIDA Super
CEILING&PARTITON

Aluminum Ceiling





Catalogue

Linear Ceiling System

C-Shaped Closed Linear Ceiling System 1
C-Shaped Wind-Resistant Linear Ceiling System 2
H-Shaped Closed Linear Ceiling System 3
G-Shaped Linear Ceiling System 4
U-Shaped Linear With Small Strip Ceiling System 5
V-Shaped Linear Ceiling System 6

Shaped Baffle Ceiling System ..... 7~8

Cell Ceiling System

Open Cell Ceiling System 9
Combination Open Cell Ceiling System 10
Pyramid Open Cell Ceiling System 11
Factory Overview 12

www.pandamanufacturer.com

Linear Ceiling System

Linear Ceiling Series is manufactured with aluminum alloy [late , the strong continuity of the plate surface and the connection line gives people comfortable and vivid feeling, can be installed with different mixtures combing the slab and bars with different width and arc, according to the designs idea arbitrarily, enabling the design ever-changing, fully function with beautiful effects.



C-Shaped Closed Linear Ceiling System

C-shaped closed linear ceiling has an excellent extensibility on visual space ,easy ti be installled and rich in visual effect. It is widely used in airport terminal buildings ,subway stations, banks, exhibition centers, office buildings ,public spaces of large conference centers. There are flat plate and punching plate in C-shaped ,with a maximum production length of 6 meters and can be processed based on customized size ,adopts 1001H,3003h24 international standards for aluminum plate .C-shaped closed linear ceiling of 50mm,75mm,100mm,150mm,200mm and 300mm can be splicing assembled freely, with no gap and all aluminum plates are closely connected. The aluminum plate is fixed on the keel clasp and can be removed separately

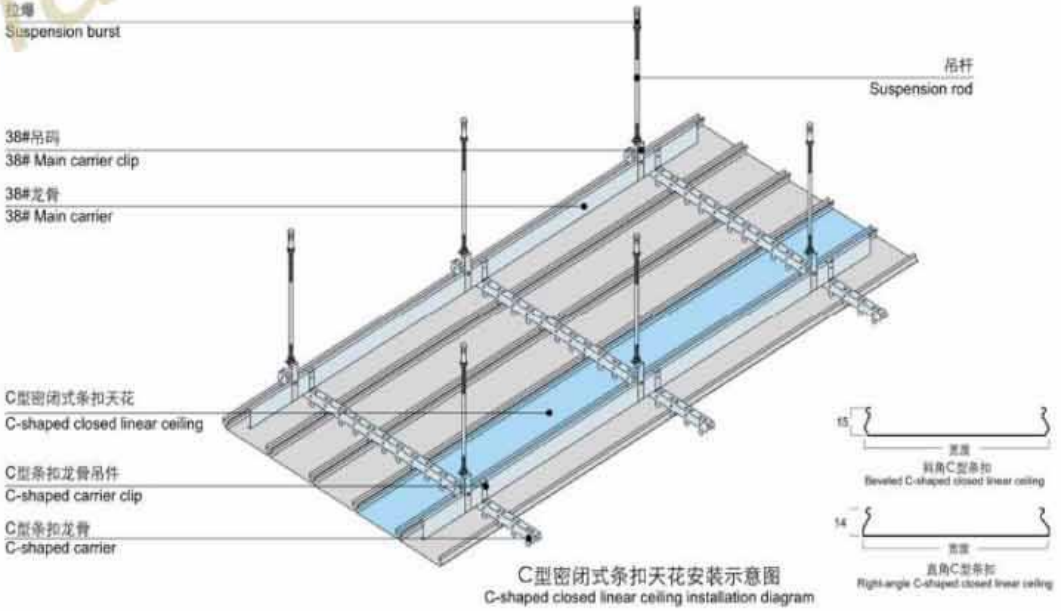

C型密闭式条扣天花安装示意图
C-shaped closed linear ceiling installation diagram

Standard Size

Width(Beveled):
75mm, 100mm, 150mm, 200mm, 300mm
Width
Width(Right-angle):
50mm, 100mm, 150mm, 200mm, 300mm
Remark:
Non-standard size can be customized.

www.pandamanufacturer.com

C-Shaped Wind-Resistant Linear Ceiling System

C-shaped wind-resistant linear ceiling holds novel structure ,the design is generous, clean as a whole ,able to perfectly express the idea of the designer ,and it is novel and unique,with structure frame full of modern sense.The characteristics of longitudinal dense splicing with flat and straight plate surface,film structure and concise and vivid connection lines ,full of dynamic changes,products series avaiable with all kinds of plastic film mulching ,spraying coating,punching ect.,applicable for indoor and outdoor installation.

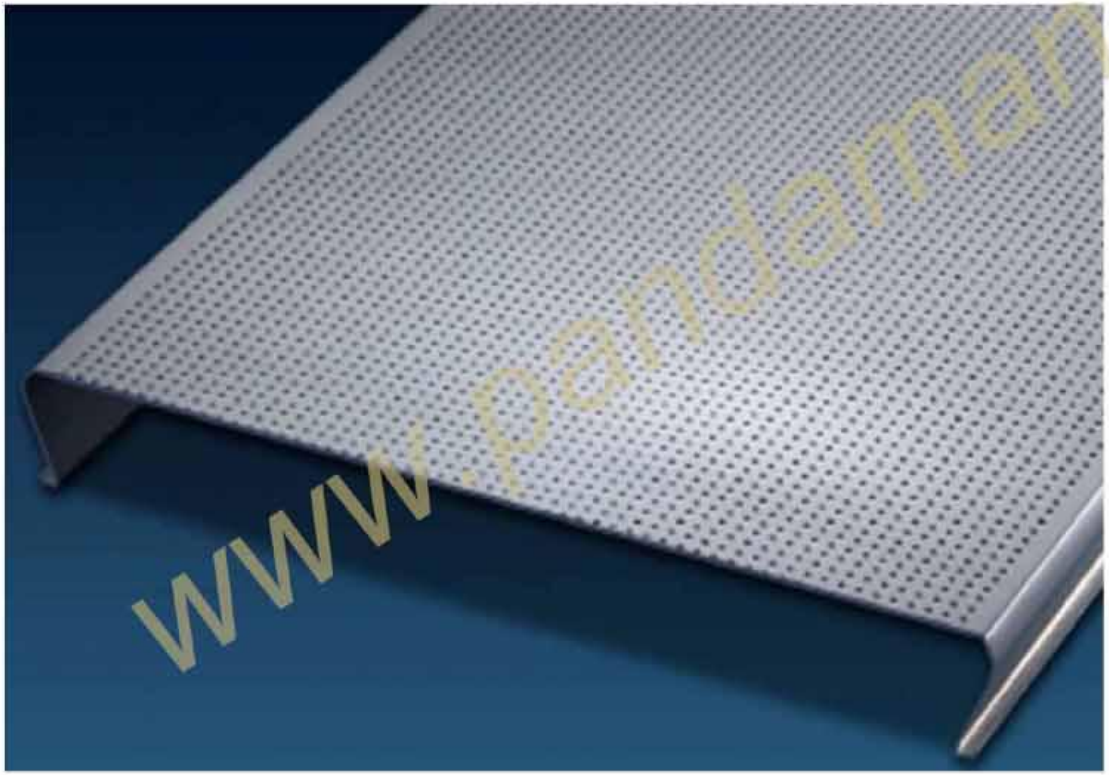

Standard Size

Width:
300mm, 400mm, 500mm, 600mm
Remark:
Non-standard size can be customized.

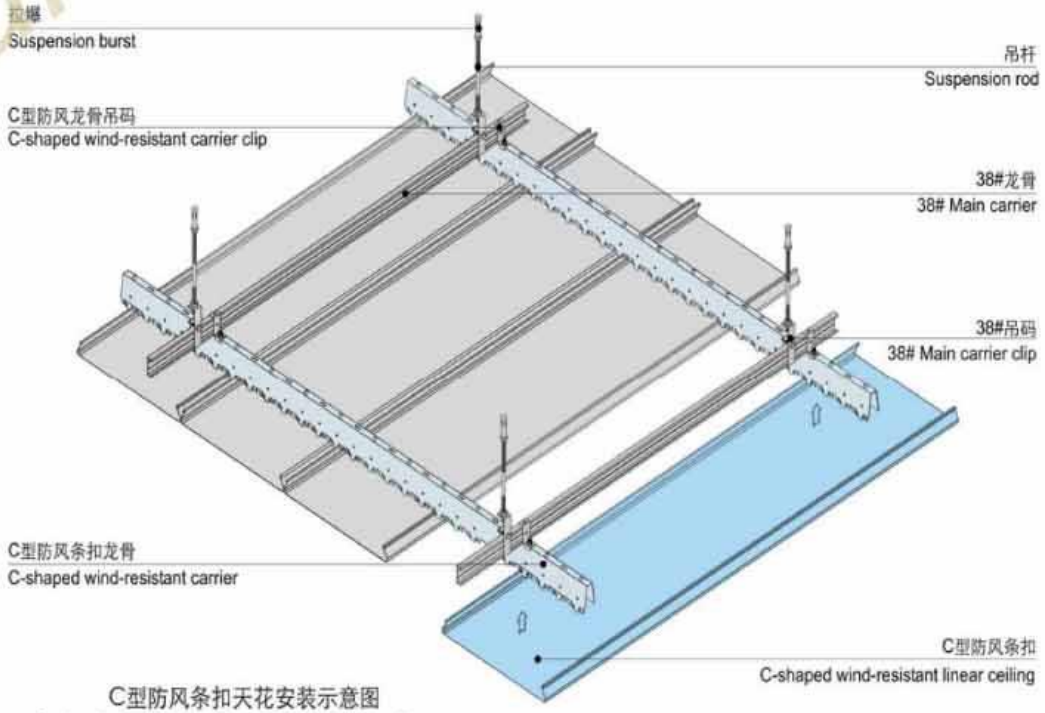

C型防风条扣天花安装示意图
C-shaped wind-resistant linear ceiling installation diagram

www.pandamanufacturer.com

H-Shaped Closed Linear Ceiling System

H-shaped linear with small ceiling is manufactured by equipment with high quality aluminum strip, right angle structure, can process flat plates or punching holes. The keel can be assembled with different specifications of lath, tight and strong structure, the lines between the plates are coherent, tighter than C buckled type, generates a comfortable, bright and clean, elegant feeling, according to the design requirement, the designers can match mixed installation for use with laths of different colors or width, enable more changes on the designs to achieve a more perfect effect.

Standard Size

Low H-shaped closed
Width: 200mm Height: 20mm
Height H-shaped closed:
Width:200mm, 300mm, 400mm, 500mm
Height:30mm
Remark:
Non-standard size can be customized.

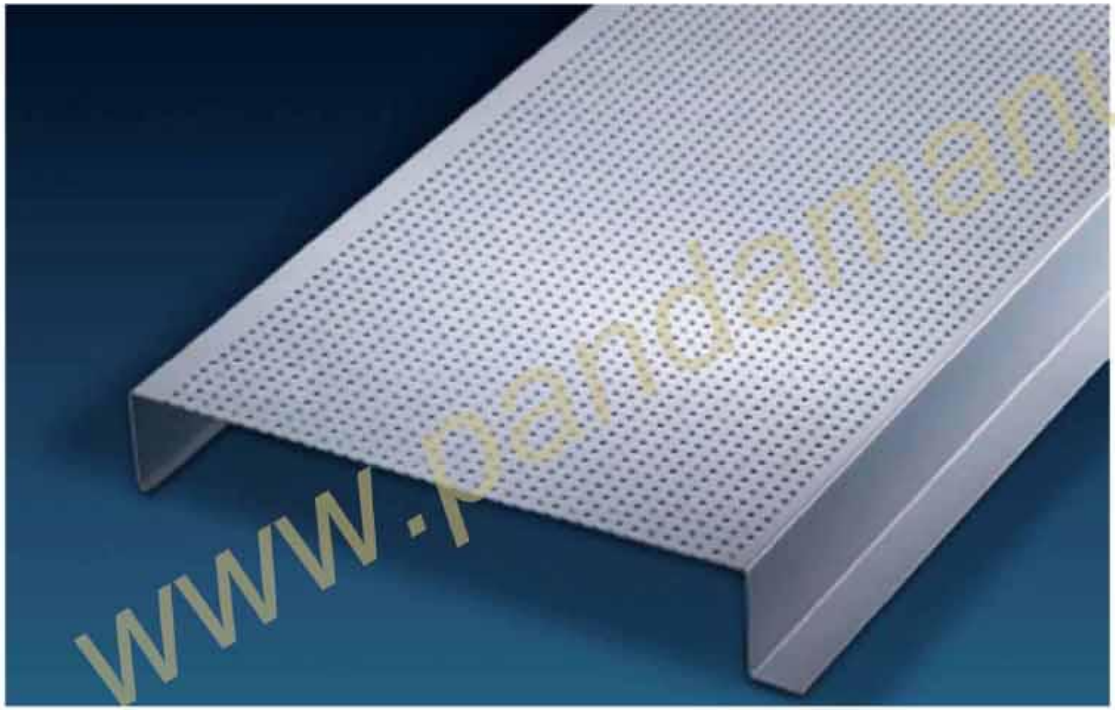

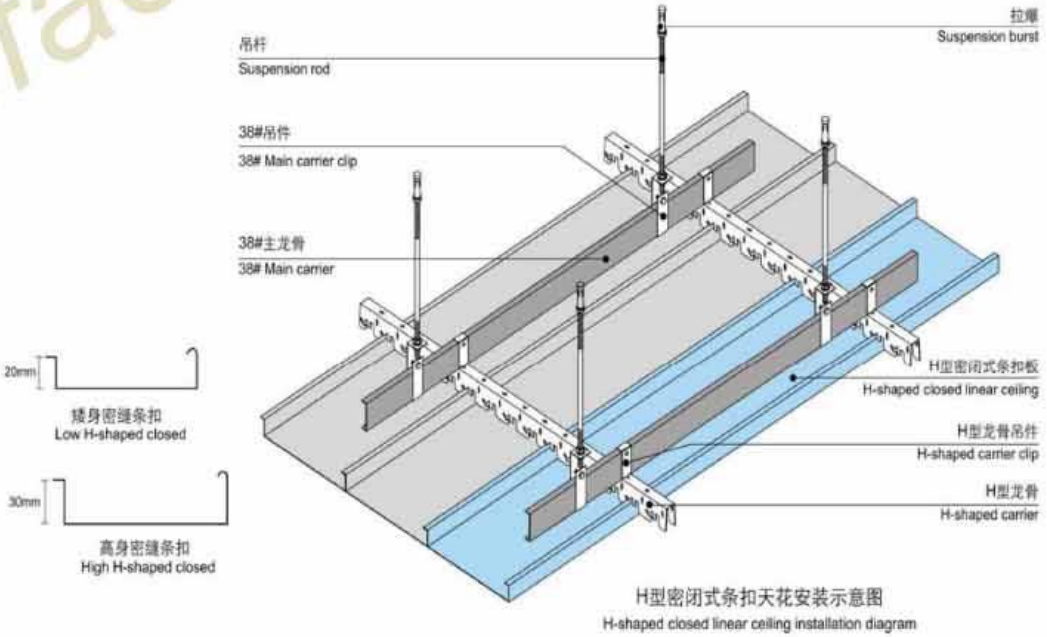

H型密闭式条扣天花安装示意图
H-shaped closed linear ceiling installation diagram

www.pandamanufacturer.com

G-Shaped Linear Ceiling System

G-shaped line ceiling is different from the traditional ceiling, with selection of high quality aluminum, the precise forming process and rich color choice, the open ceiling creates a beautiful and generous model and ever-changing colorful space. Seamless splicing: groove is formed between the plates, offsetting the possible hidden defects of deformation and sagging, etc. on plate surface ,so as to achieve more perfect joints between the ceiling plates, no matter looking from far or close distance, the ceiling shows an alternation of light and dark, highlight a strong sense of hierarchy and three- dimensional sense of the space.



Standard Size

Width:
100mm, 200mm, 300mm, 400mm,
Height:
15mm
Remark:
Non-standard size can be customized.

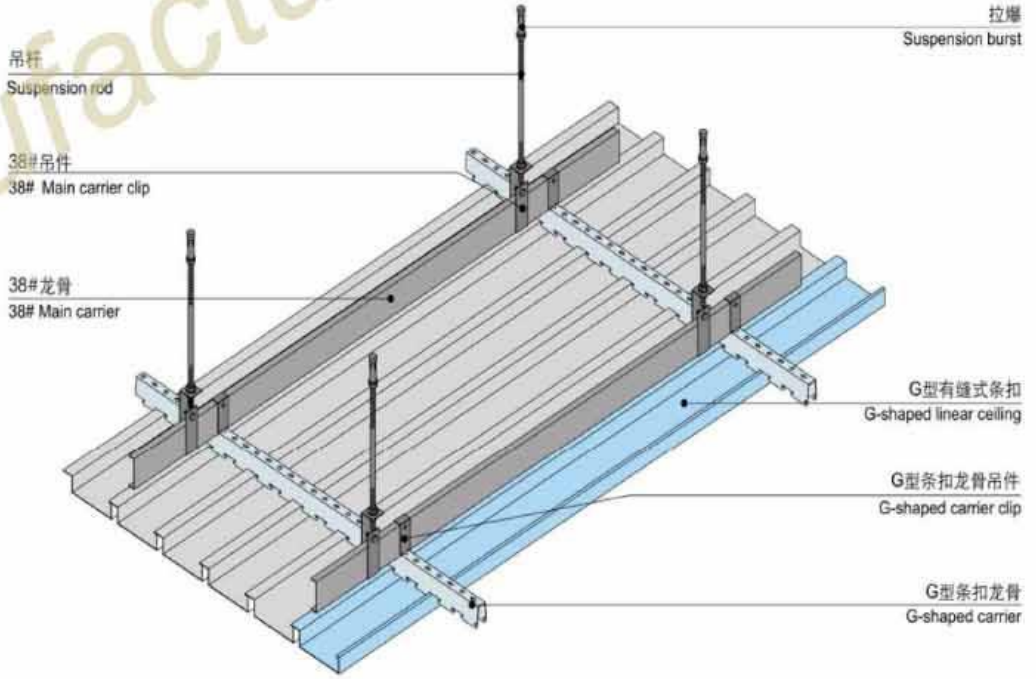

G型有缝式条扣天花安装示意图
G-shaped linear ceiling installation diagram

www.pandamanufacturer.com

U-Shaped Linear With Small Strip Ceiling System

U-shaped linear with small ceiling is another new combination of the bar buckled ceiling family, adding new features to modern architecture. This product is composed of three series types including 85 matching small strip,135 matching small strip and 185matching small strip. With a better sense of hierarchy and fashion; is the ideal decorative material for swimming pools, offices, shopping malls and other places.

Standard Size

85mm U-shape linear with 20mm small strip;
135mm U-shape linear with 15mm small strip;
185mm U-shape linear with 20mm small strip;
Remark:
Non-standard size can be customized.

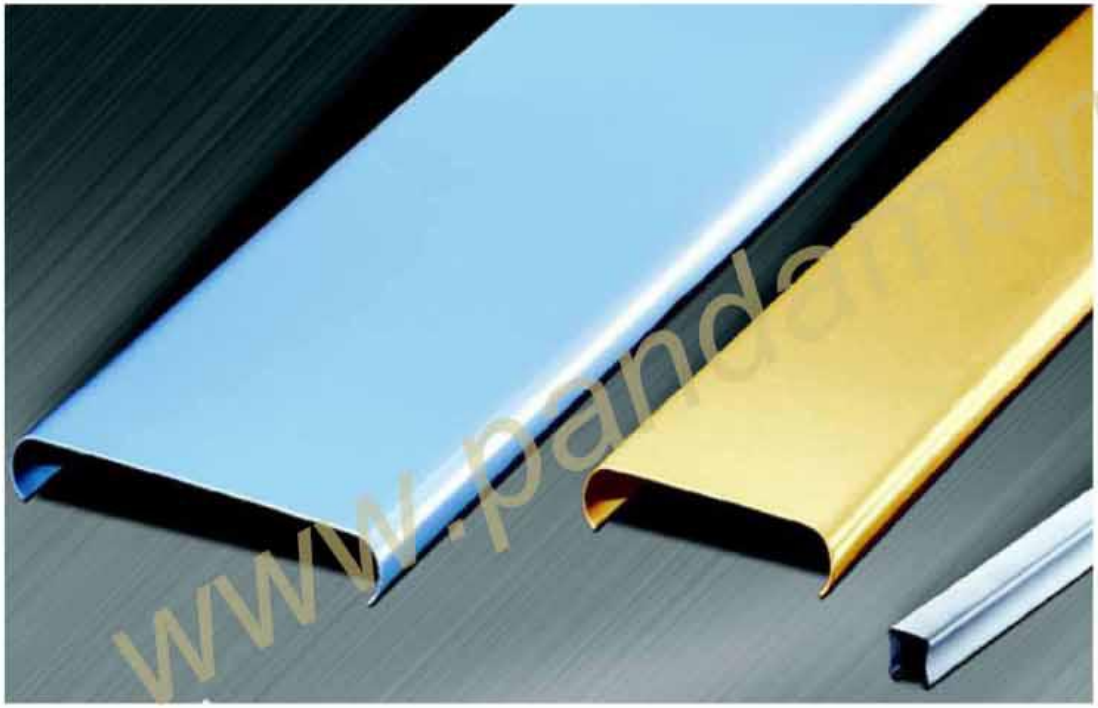

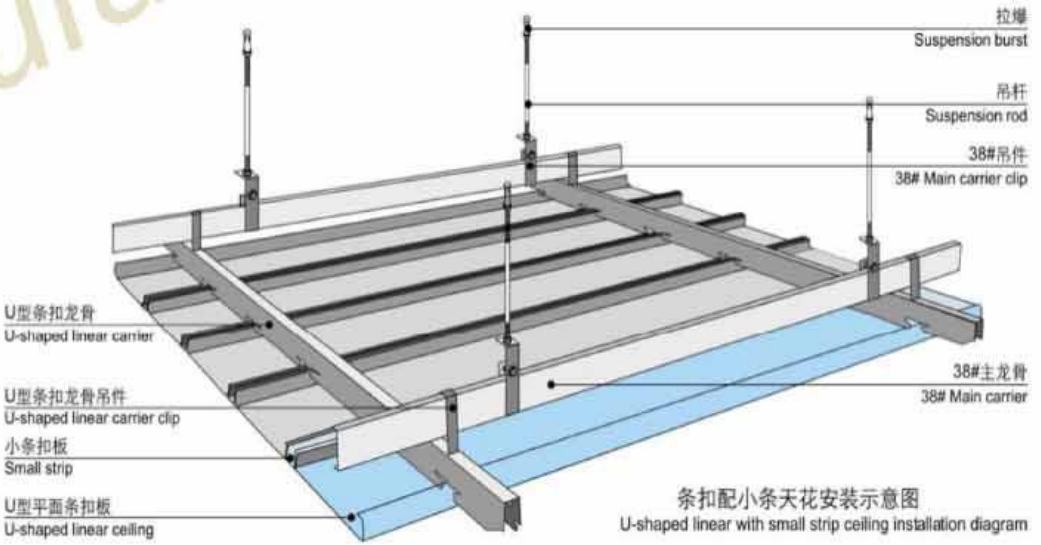

www.pandamanufacturer.com

V-Shaped Linear Ceiling System

V-shaped linear ceiling series are all manufactured with aluminum alloy, the keel, hanging pieces are steel plates with galvanized coating or baked paint finish, the corner is aluminum alloy. There are a variety of color options for the surface, matte, brushed, mirror paint etc.. With fireproof function , it can be used high temperature environment, and adding insulation cotton on the upper part of the ceiling can obtain good noise-absorbing effect, and can meet any ventilation requirements.



Standard Size

V-shaped linear with small strip,
Small strip width:15mm
Remark:
Non-standard size can be customized

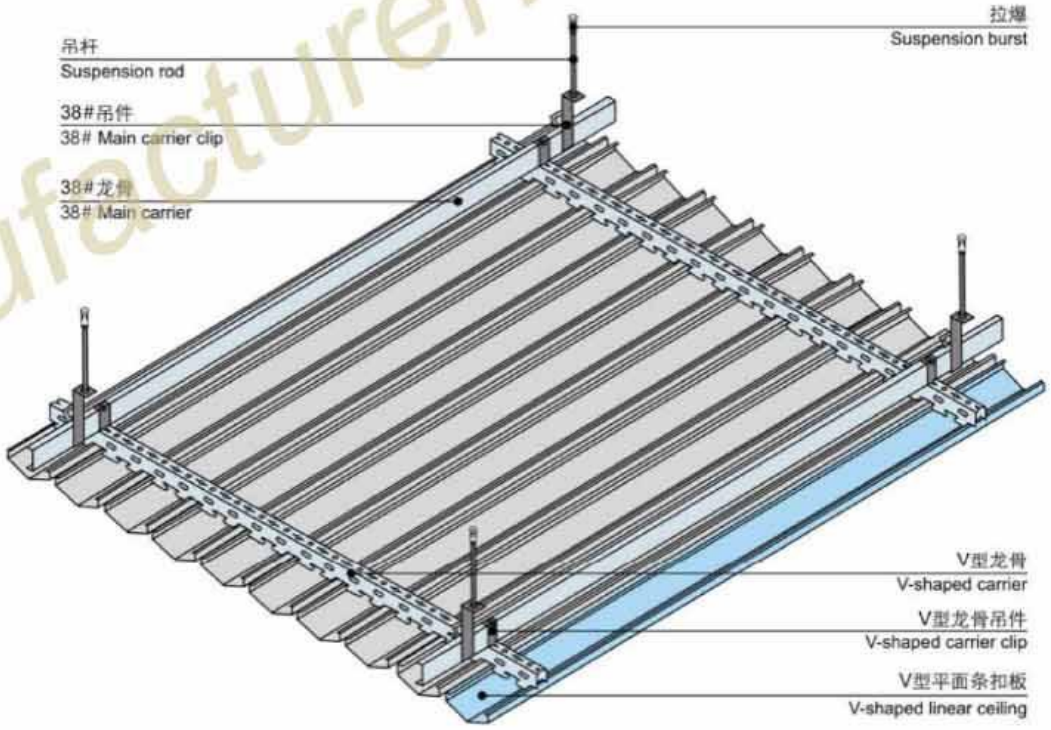

V型条扣天花安装示意图
V-shaped linear ceiling installation diagram

www.pandamanufacturer.com

U-Shaped Baffle Ceiling System

A decorative curtain type ceiling ,able to adjust the visual height of a house, and can hide all the pipelines and other facilities in the bottom of building, and can also lead sunlight or lamplight. It enables an open field of vision, good ventilation and air flow, the connection lines are bright and neat, with clear levels, reflecting the concise modern style, simple and convenient in installation assembly, has become the main popular product on decoration market.

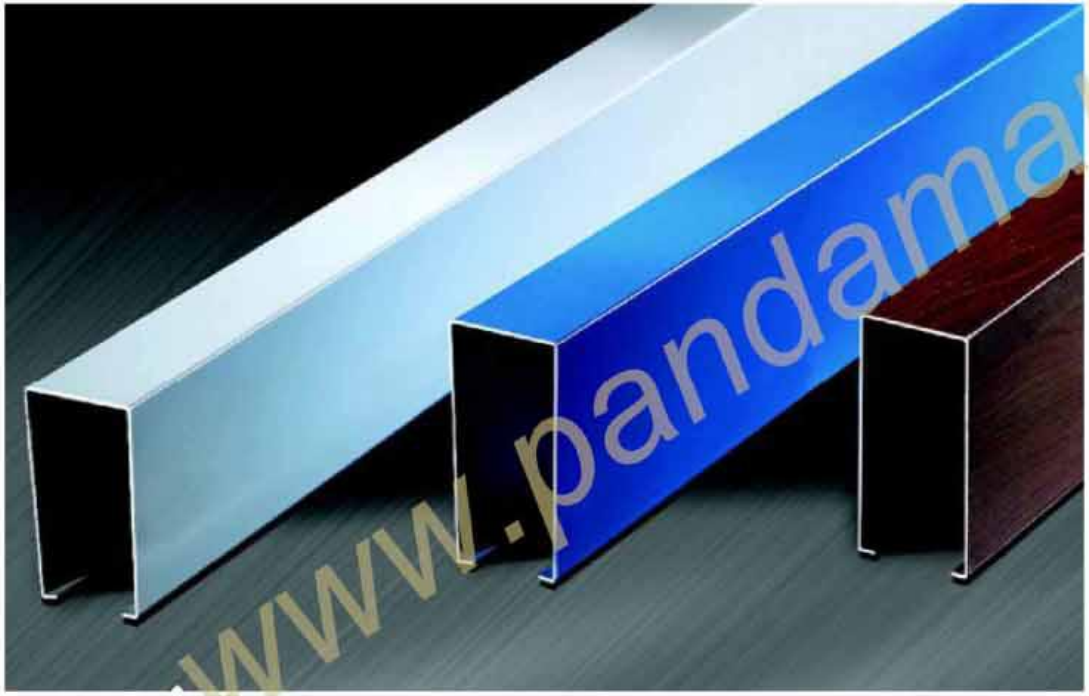

Standard Size

Width:20、25、40、50、60、70、80mm
Height:30、40、50、60、70、80、90、100、110、120、130、140、150、160、170、180、190、200mm
Width:30mm
Height:25、30、40、50、60、70、80、90、100、110、120、130、140、150、160、170、180、190、200mm
Width:100、110、120、130、140、150、160、170、180、190、200mm
Height:20、30、40、50mm
Remark:
1.Non-standard size can be customized.
2.Galvanized iron U-shape baffle can be customized.

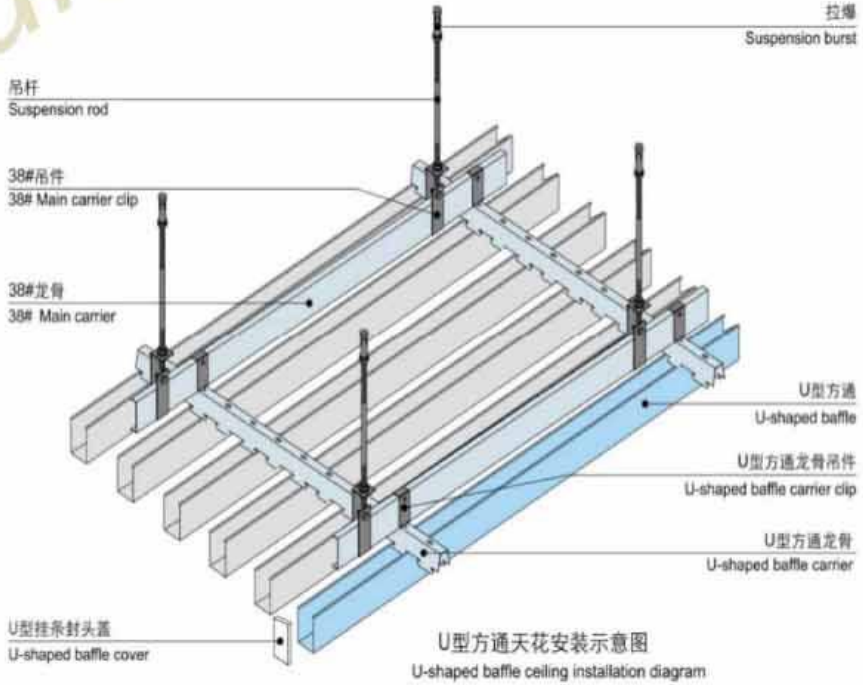

U型方通天花安装示意图
U-shaped baffle ceiling installation diagram

www.pandamanufacturer.com

Aluminum Ceiling


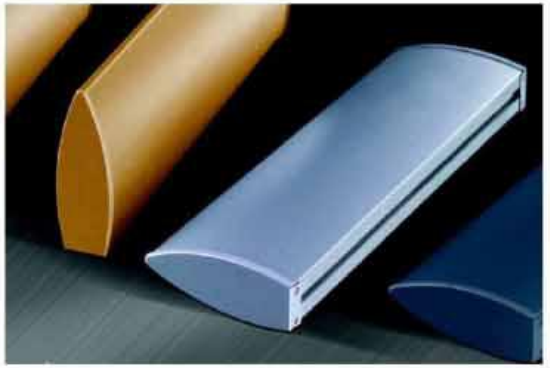

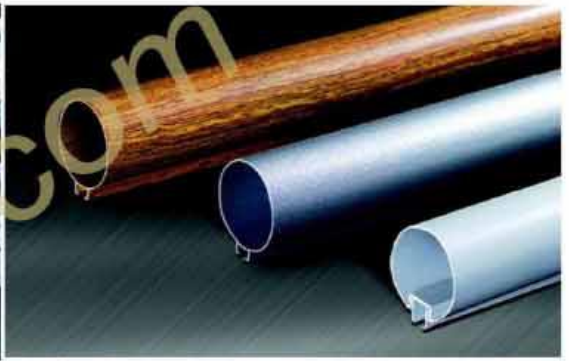

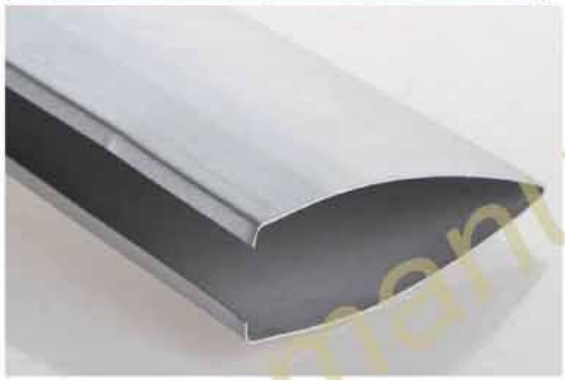



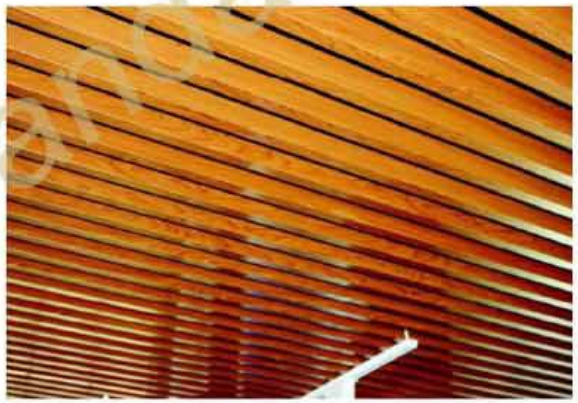
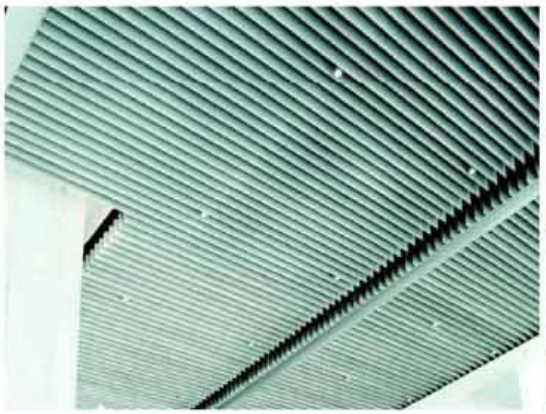


www.liandamanufacturer.com

Open Cell Ceiling System

Open cell ceiling system is an open decorative suspended ceiling combined criss-crossing assembled grille main bones and auxiliary bone. Open cell ceiling is good in ventilation result, good fireproof performance, simple in installation, with exquisite structure, rich in layering, holds a wide opening stereoscopic effect, achieving graceful appearance and gorgeous color up completion of the decoration.



Standard Size

Width:10mm Height:30,35,40,45,50mm
Size:100*100, 110*110, 120*120, 125*125, 150*150, 200*200, 250*250, 300*300mm
Width:15mm Height:50,60,80,90,100,110,120mm
Size:110*110, 120*120, 125*125, 150*150, 200*200, 250*250, 300*300mm
Width:20mm Height: 50,60,70,80,90,100,110,120mm
Size:100*100, 110*110, 120*120, 125*125, 150*150, 200*200, 250*250, 300*300mm
Width:23mm Height: 38mm
Size: 110*110, 120*120, 125*125, 150*150, 200*200, 250*250, 300*300mm
Width:30mm Height: 100mm
Size: 110*110, 120*120, 125*125, 150*150, 200*200, 250*250, 300*300mm

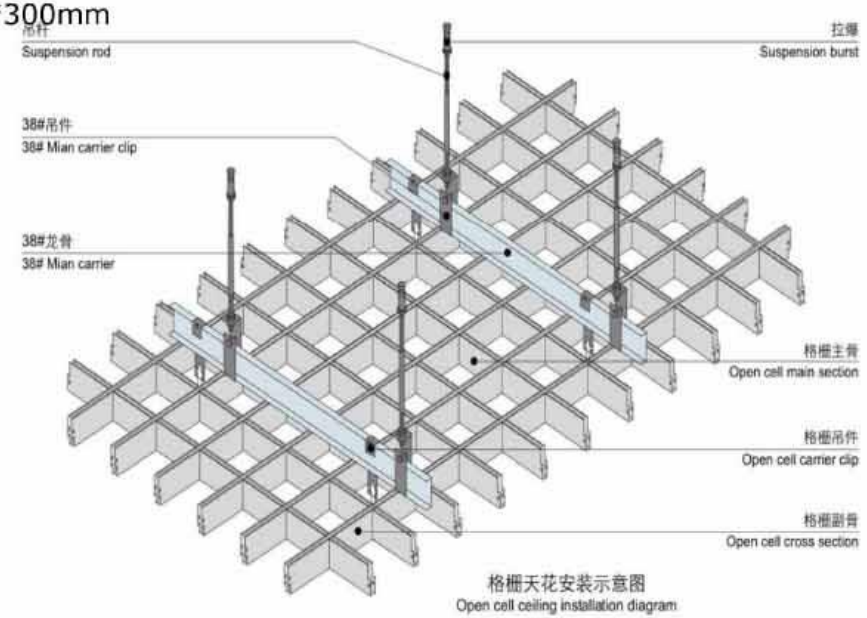

格栅天花安装示意图
Open cell ceiling installation diagram

www.pandamanufacturer.com

Combination Open Cell Ceiling System

Combination Open Cell Ceiling y=through the designer's idea, break through the traditional concept, using complex ceiling, and is different from the general grille, generous maintain: it can put the lamp and lanterns, air conditioning system, fire fighting equipment placed within the ceiling. The installation is simple, but optional installation and removal, no special tools, convenient maintenance.



Standard Size

Width:10mm
Height:40mm
Size:1800*1200mm, 1800*600mm, 2400*1200mm
Remark:

1. Non-standard size can be customized.
2. Galvanized iron combination open cell can be customized.

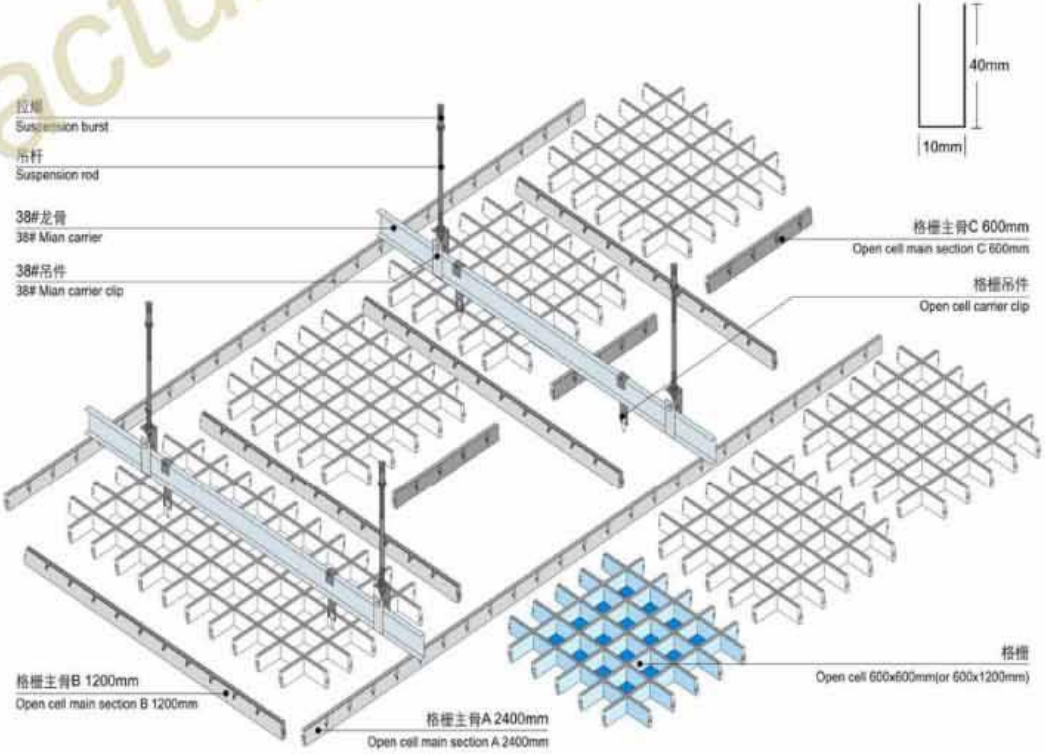

格栅天花安装示意图
Combination open cell ceiling installation diagram

www.pandamanufacturer.com

Pyramid Open Cell Ceiling System

Using high quality aluminum alloy plate, a special convex structure forms tower type open cell, its open space is conducive to the layout and arrangement of the ventilation facilities and fire-extinguishing sprinkler without affecting the overall visual effect, uniform color, being used indoors, warranty for no discoloration in 10 years. It can be used in the public places, which can make the air distribution ,air exhaust and heat dissipation as well as make uniform light distribution, enabling the whole space to be bright and bright.



Standard Size

Low pyramid open cell ceiling
Height:30mm
High pyramid open cell ceiling
Height:50mm
Size: 100*100, 110*110, 120*120, 125*125, 150*150, 200*200, 250*250, 300*300mm

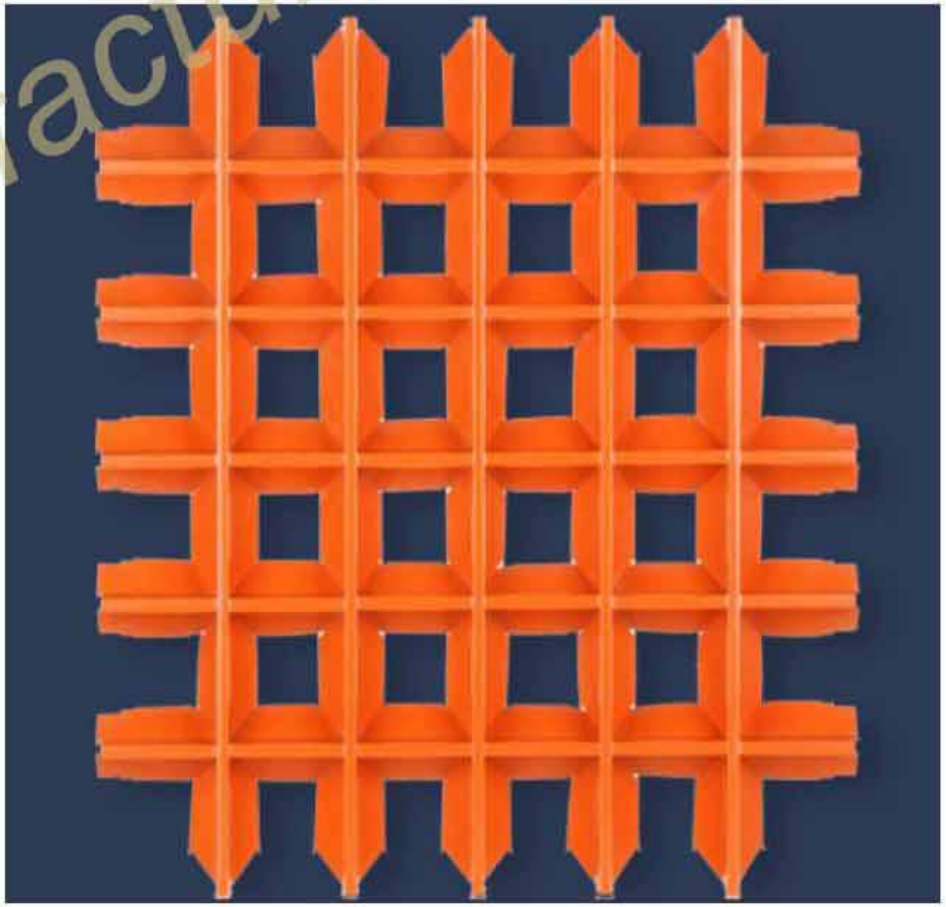

www.pandamanufacturer.com

Factory Overview












www.pandamanufacturer.com